Technical Sheet

SPK8500

Serial number:

Lifting moment:

Max. lifting capacity:

Max. hydraulic outreach:

Slewing angle:

Slewing torque:

Operating pressure:

Pump capacity:

Hydr. boom extensions:	**1**	**2(A)**	**3(B)**
Max. outreach:			

All weights given without assembly accessory, additional devices and oil .

Crane weight (R1,STZS):			

Weight + V without 2/4:

Subject to change,production tolerances have to be taken into account. .

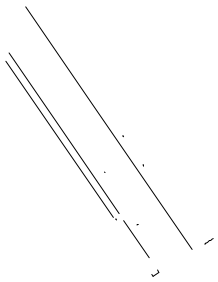

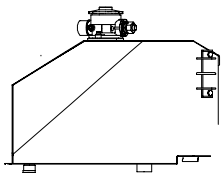

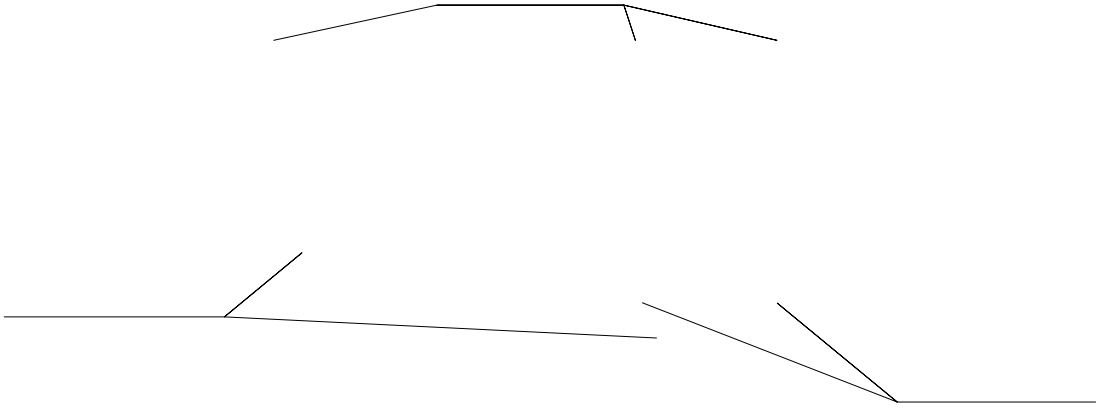

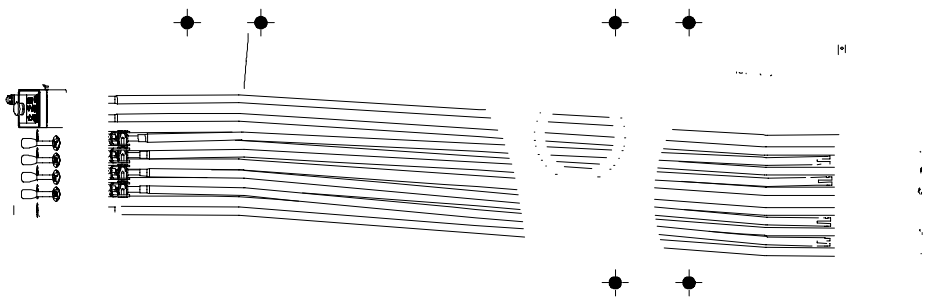

HT1442A

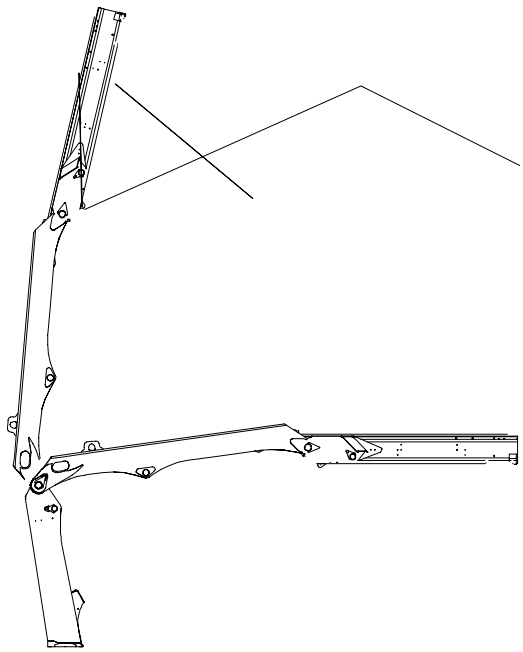

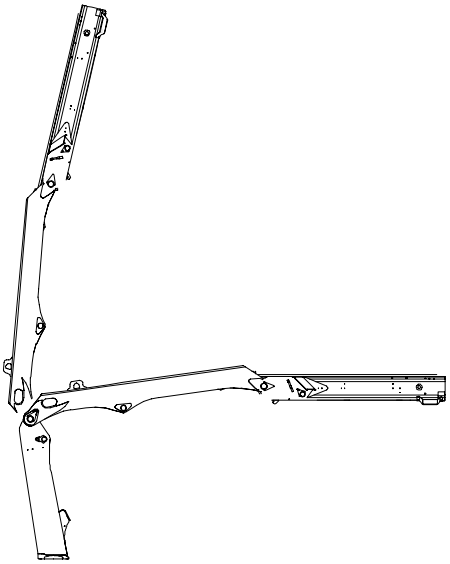

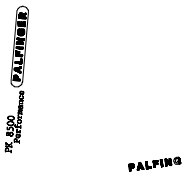
PALFINGER
PK 8500
Performance
PALFING

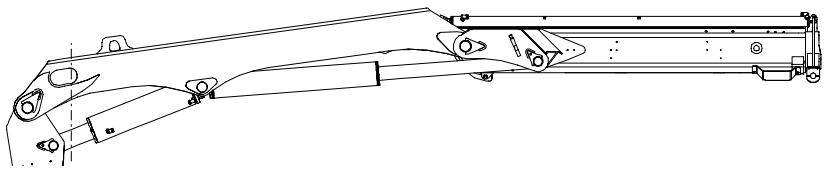

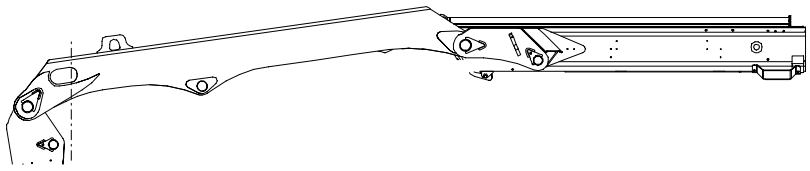

	Page		Page
Control-FL	**0200**	*Boom extension ram*	**0500**
Control-FL+supporting valve	**0300**	*Crane support+supporting valve* 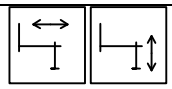	**0600**
Swivel-main boom-outer boom 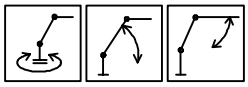	**0400**	*Overload protection-OSK*	**0700**

Description

1	*Oil tank*	**11**	*One way restrictor*	**21**	*Quick-coupling*
2	*Hydraulic pump*	**12**	*Double-acting holding valve*	**22**	*Grab cylinder*
3	*High pressure filter*	**13**	*Slewing system*	**23**	*Rotator.*
4	*Control valve-crane*	**14**	*Load holding valve*	**24**	*Pilot controlled check valve*
5	*Dial gauge connection*	**15**	*Pressure transducer*	**25**	*Stabilizer ram*
6	*Emergency cut-off valve*	**16**	*Lifting cylinder*	**26**	*Pre tension valve*
7	*Return oil filter*	**17**	*Outer boom ram*	**27**	*Stabilizer extension ram*
8	*Control valve-stabil.*	**18**	*Boom extension ram* I I	**28**	*Pressure switch*
9	*Control rod with emergency cut off*	**19**	*Boom extension ram* II II	**29**	*Overload block*
10	*Oil cooler*	**20**	*Boom extension ram* III III		

Subject to change,production tolerances have to be taken into account.

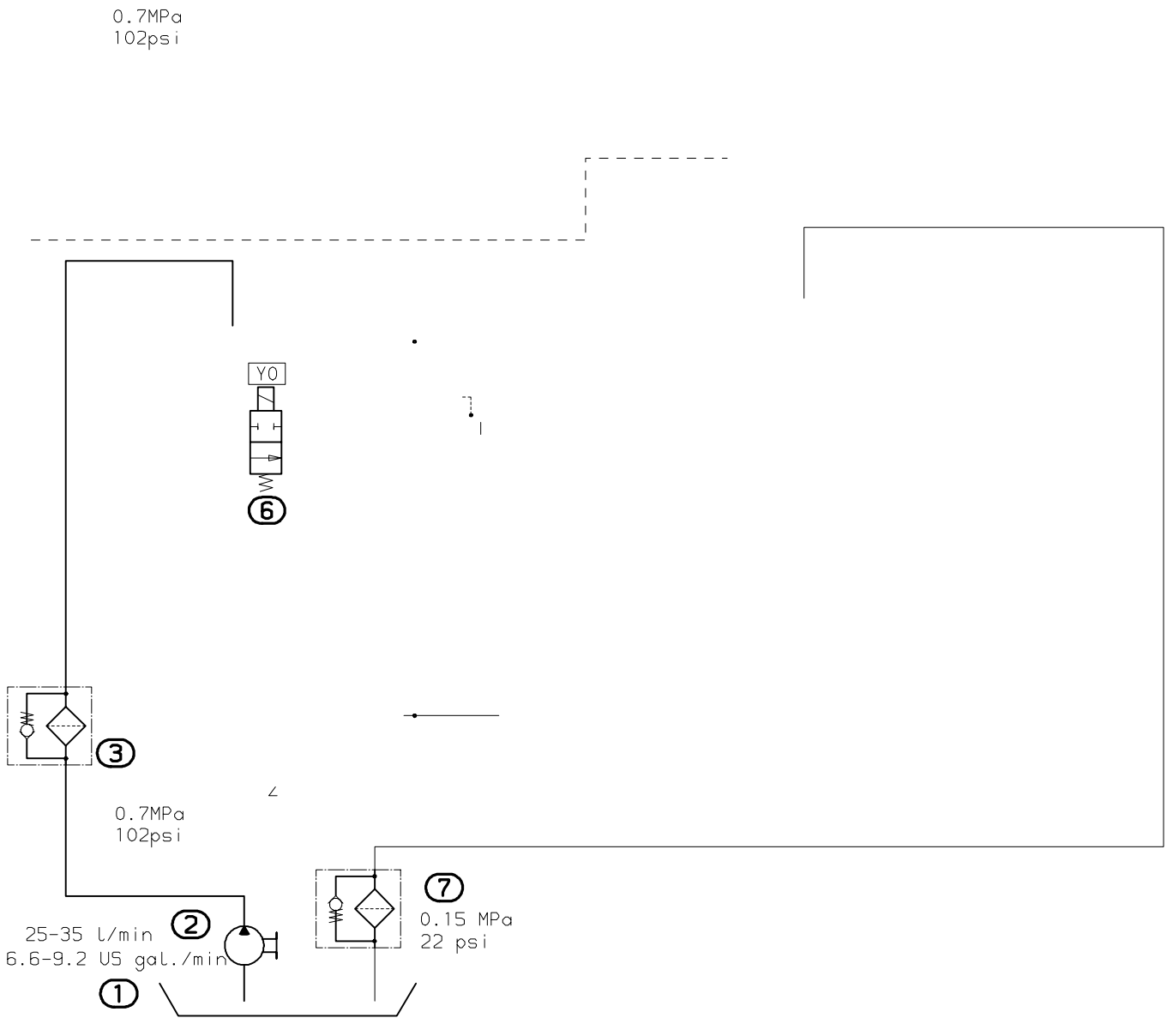
0.7MPa
102psi
Y0
6
3
0.7MPa
102psi
7
0.15 MPa
22 psi
25-35 l/min
6.6-9.2 US gal./min
2
1

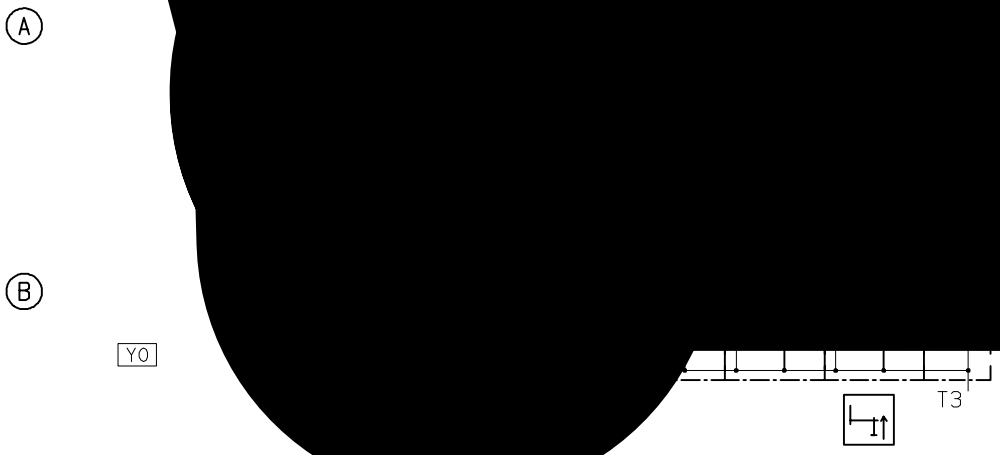
A
B
Y0
T3

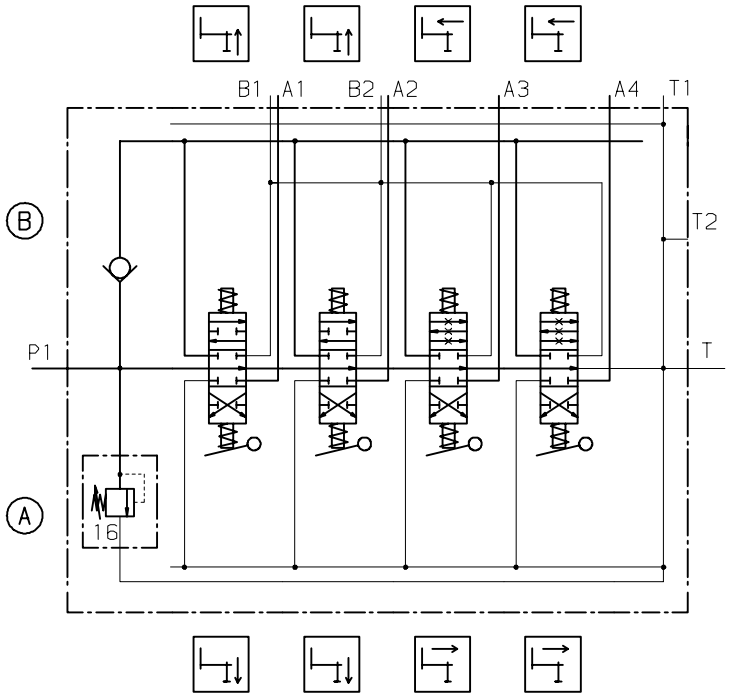
B1
A1
B2
A2
A3
A4
T1
T2
T
P1
B
A
16

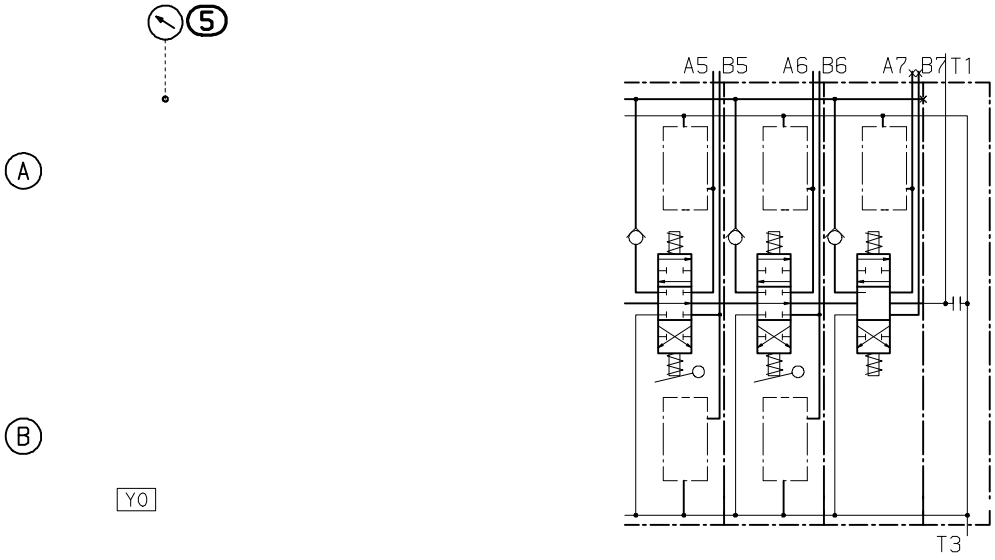

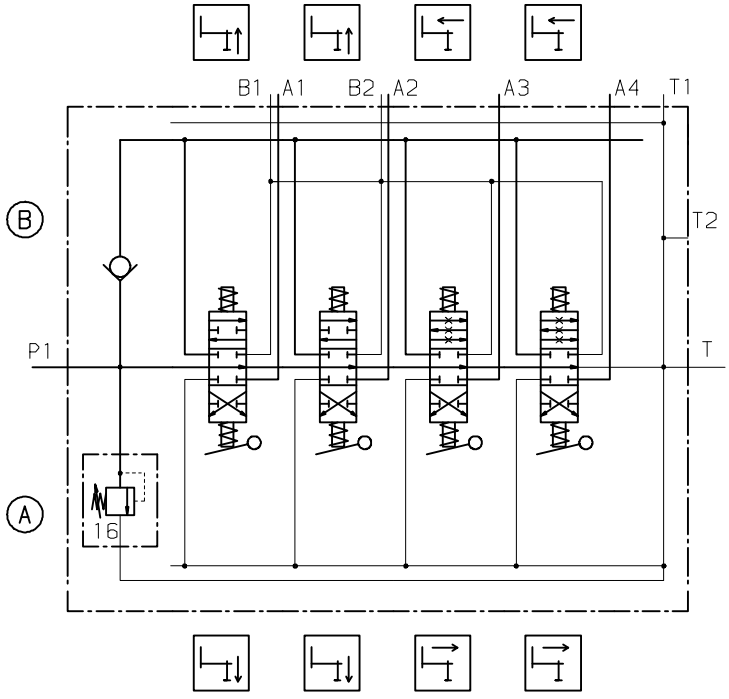

Tank volumn according to installation manual

1 MPa = 10 bar = 145 psi

Unit in pressure = MPa

Subject to change,production tolerances have to be taken into account.

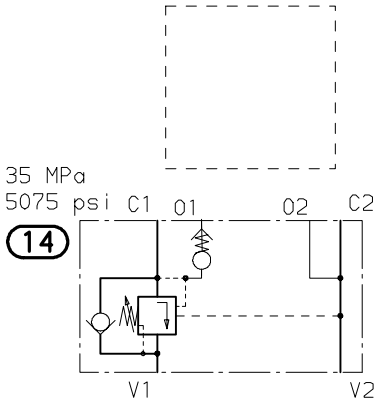
35 MPa
5075 psi
C1
O1
O2
C2
14
V1
V2

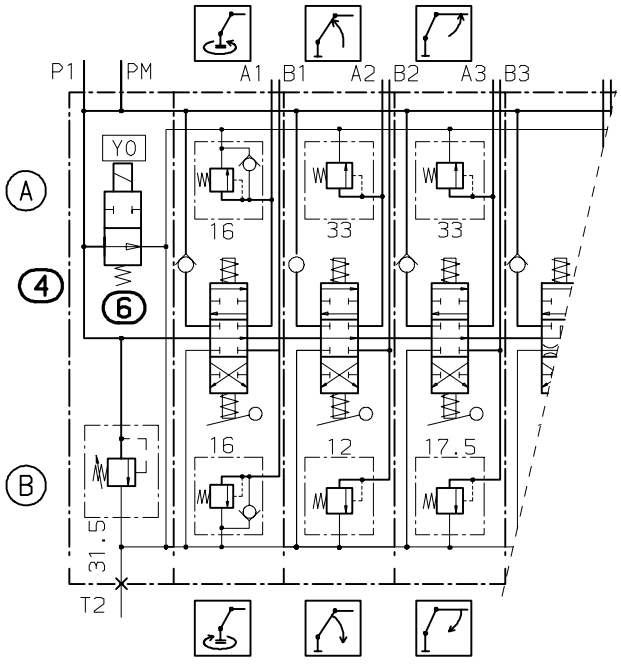
P1
PM
A1
B1
A2
B2
A3
B3
Y0
A
4
6
B
16
33
33
16
12
17.5
31.5
T2

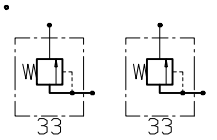
33
33

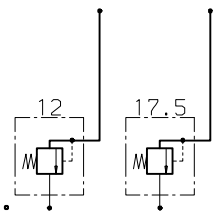
12
17.5

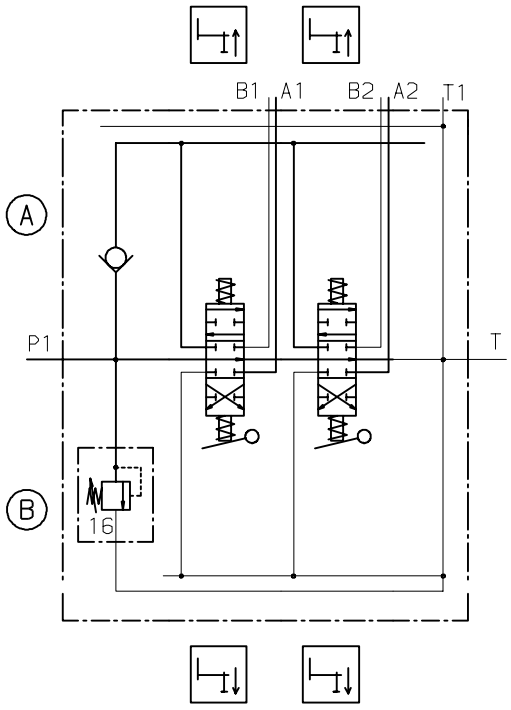
B1
A1
B2
A2
T1
A
P1
T
B
16

1 MPa = 10 bar = 145 psi

Unit in pressure = MPa

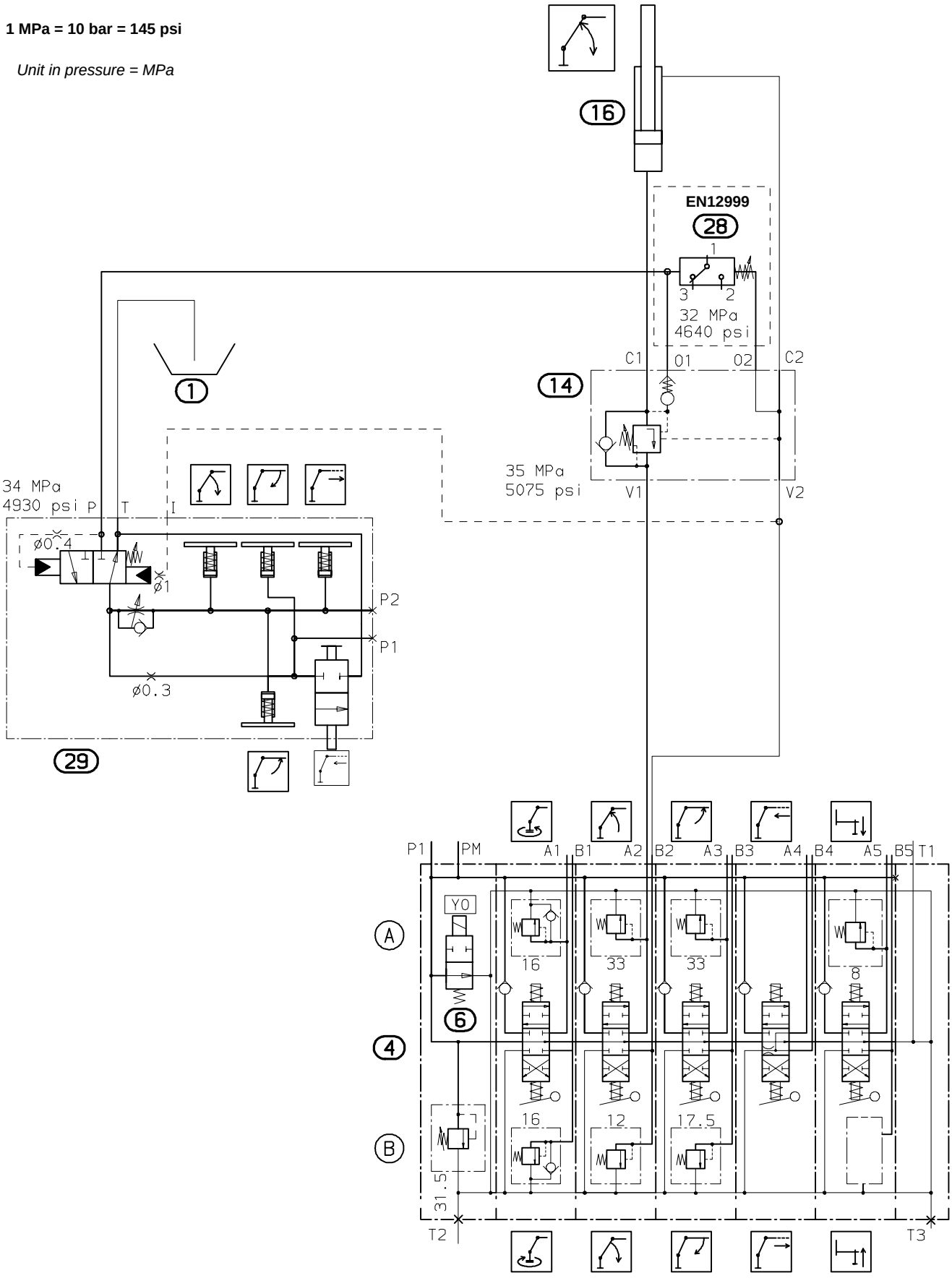

Subject to change,production tolerances have to be taken into account.